Integrated Headset (CC)

NO.55R 1.8"/CR

1-1/8"/ 1.8", 36°/ 45° ACB

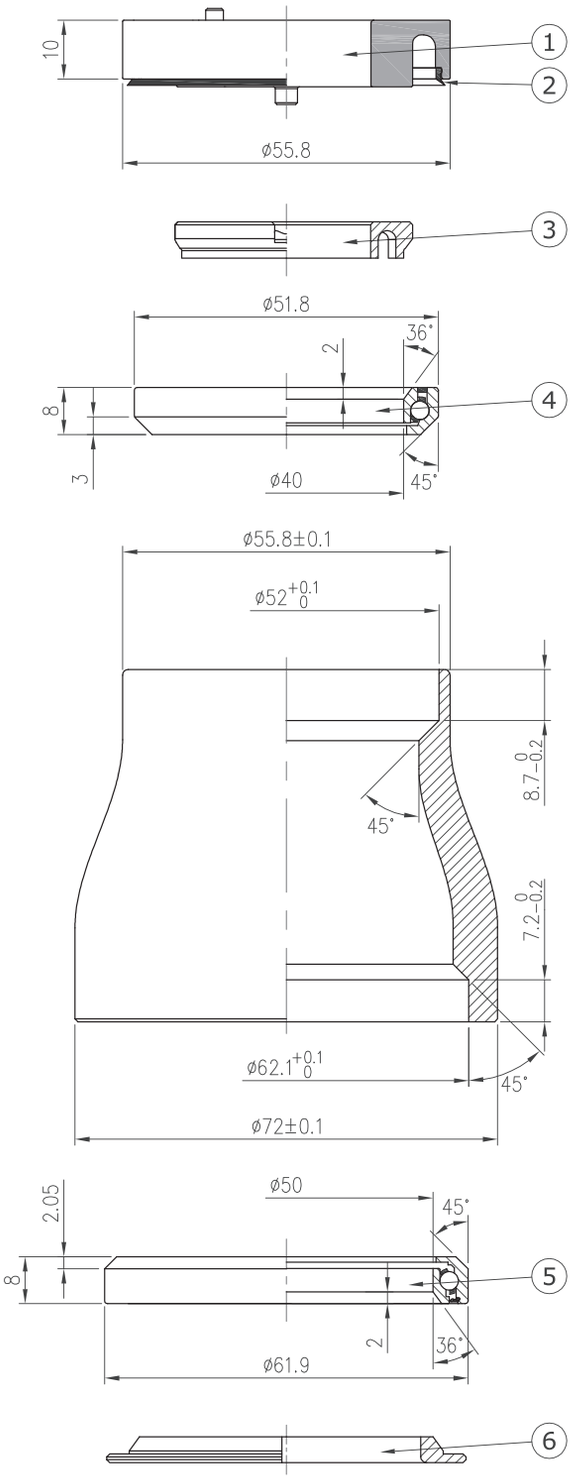

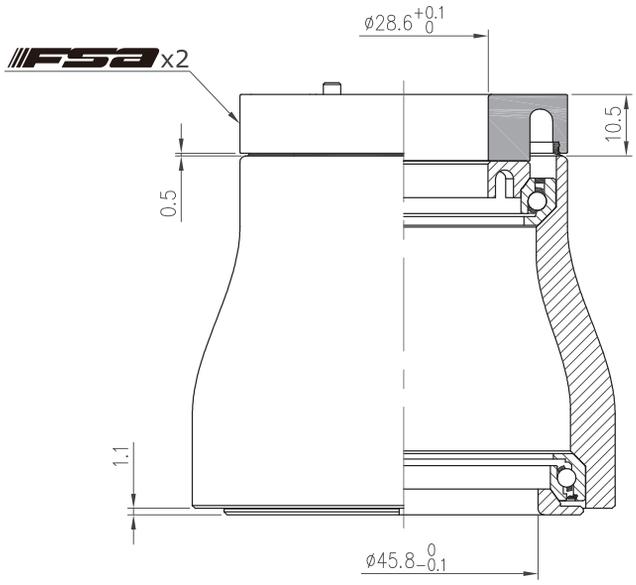

Stack Height 10.5+1.1=11.6

Weight - 75.8 grams

- For tapered 55.8mm / 72mm OD head tube
- For 1-1/8" to 1.8" tapered fork
- CR top cover
- Angular Contact Bearing (Black seal)

No	Item No	Material	Qty
6	H6161	Alloy	1PCS
5	MR229{1.8"E}	Chrome steel	1SET
4	MR127{073E-RS}	Chrome steel	1SET
3	H2474{NO.55R 1.5/ACR}	Alloy	1PCS
2	MS194{NO.9M/CUP/CC/1.5R}	Steel w/ rubber sealed	1PCS
1	H2473{NO.55R 1.5/CR/STD}	Nylon	1PCS

FSA